Thule EasyFold XT

933

THULE SWEDEN

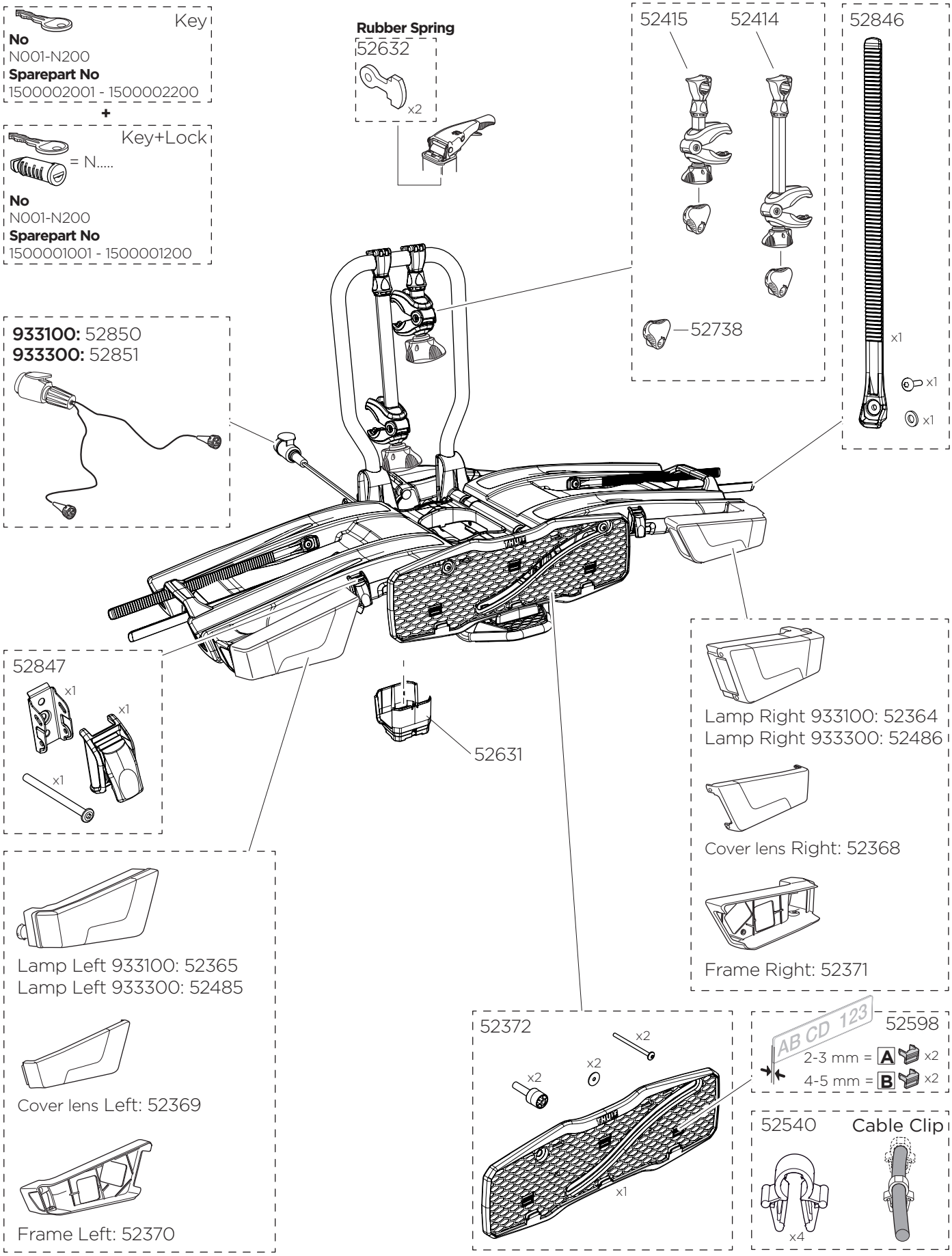

» PART OF THULE GROUP